Product Specifications

COMMSCOPE®

300PSM-C-CR

SMA Male for CNT-300 braided cable

General Specifications

Interface	SMA Male
Body Style	Straight
Brand	CNT®

Electrical Specifications

Operating Frequency Band	0 – 6000 MHz
Cable Impedance	50 ohm
Connector Impedance	50 ohm
RF Operating Voltage, maximum (vrms)	500.00 V
dc Test Voltage	1000 V
Outer Contact Resistance, maximum	2.50 mOhm
Inner Contact Resistance, maximum	3.00 mOhm
Insulation Resistance, minimum	5000 MOhm
Average Power	360.0 W @ 900 MHz
Peak Power, maximum	5.00 kW
Insertion Loss, typical	0.05 dB

Outline Drawing

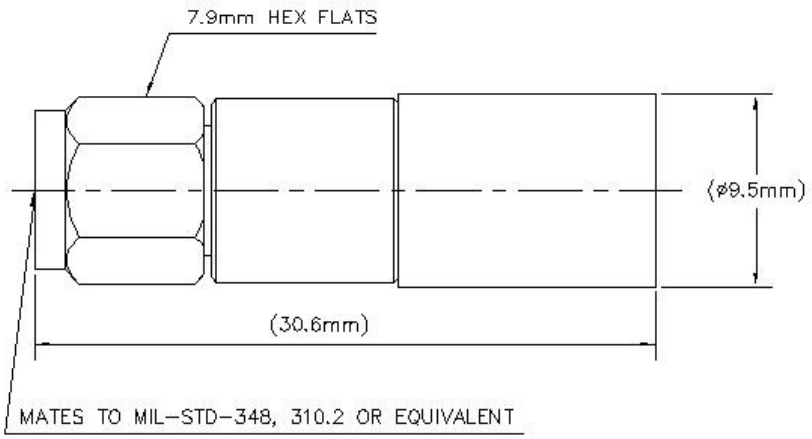

Mechanical Specifications

Outer Contact Plating	Trimetal
Inner Contact Plating	Gold
Outer Contact Attachment Method	Crimp
Inner Contact Attachment Method	Captivated
Interface Durability	500 cycles
Interface Durability Method	IEC 61169-15:9.5
Connector Retention Tensile Force	220 N | 49 lbf
Connector Retention Torque	0.45 N-m | 0.33 ft lb
Insertion Force	22.00 N | 4.95 lbf
Insertion Force Method	IEC 61169-15:9.3.5
Pressurizable	No
Coupling Nut Proof Torque	1.70 N-m | 1.25 ft lb
Coupling Nut Proof Torque Method	IEC 61169-15:9.3.6
Coupling Nut Retention Force	180.00 N | 40.47 lbf
Coupling Nut Retention Force Method	IEC 61169-15:9.3.11

Dimensions

Nominal Size	0.300 in
Diameter	9.50 mm | 0.37 in
Length	30.57 mm | 1.20 in
Weight	9.87 g | 0.02 lb
Width	9.50 mm | 0.37 in

Environmental Specifications

Operating Temperature	-40 °C to +85 °C (-40 °F to +185 °F)

Storage Temperature	-65 °C to +125 °C (-85 °F to +257 °F)
Water Jetting Test Mating	Mated
Water Jetting Test Method	IEC 60529:2001, IP65
Mechanical Shock Test Method	IEC 60068-2-27
Climatic Sequence Test Method	IEC 60068-1
Damp Heat Steady State Test Method	IEC 60068-2-3
Thermal Shock Test Method	IEC 60068-2-14
Vibration Test Method	IEC 60068-2-6
Corrosion Test Method	IEC 60068-2-11

Standard Conditions

Attenuation, Ambient Temperature	20 °C | 68 °F
Average Power, Ambient Temperature	40 °C | 104 °F
Average Power, Inner Conductor Temperature	100 °C | 212 °F

Return Loss/VSWR

Frequency Band	VSWR	Return Loss (dB)
0–3000 MHz	1.06	31.00
3000–6000 MHz	1.12	25.00

Regulatory Compliance/Certifications

Agency	Classification
RoHS 2011/65/EU	Compliant by Exemption
China RoHS SJ/T 11364-2006	Above Maximum Concentration Value (MCV)
ISO 9001:2008	Designed, manufactured and/or distributed under this quality management system

* Footnotes

Insertion Loss, typical 0.05v¯freq (GHz) (not applicable for elliptical waveguide)